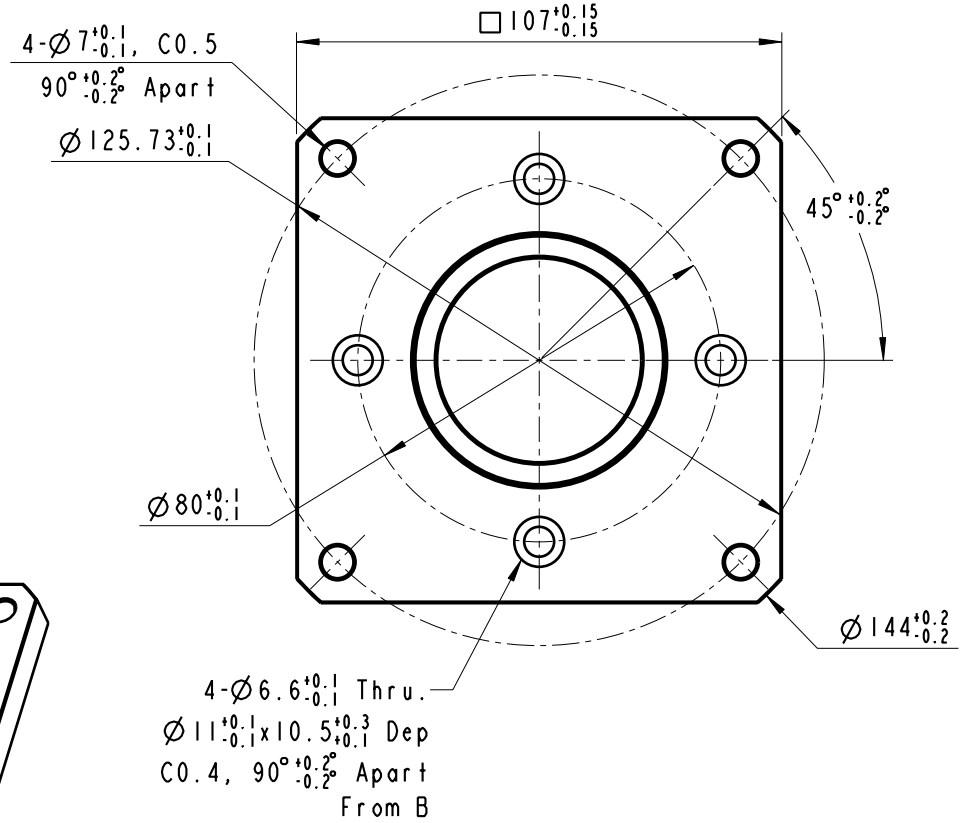

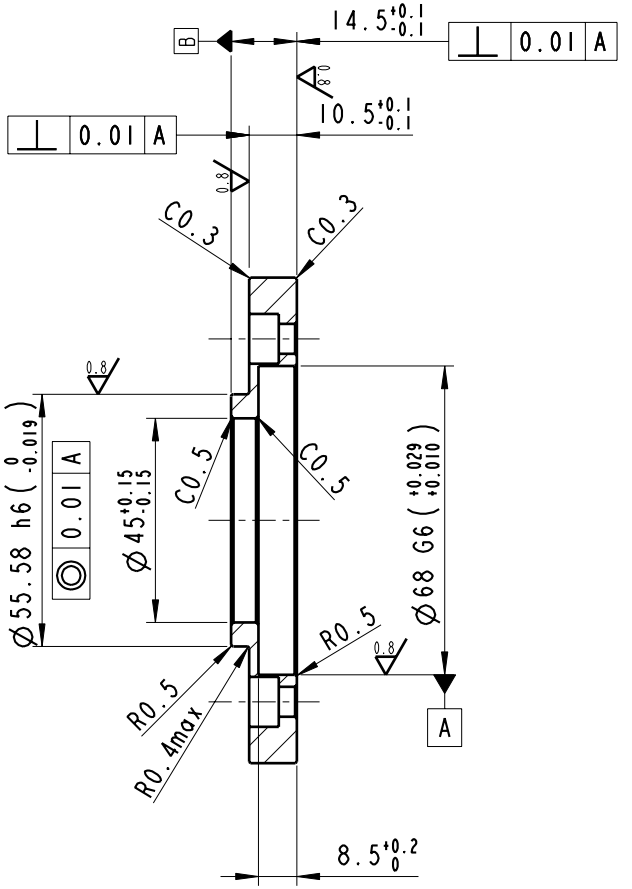

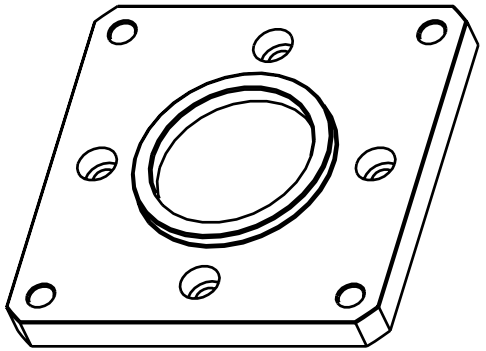

SCALE 1:2

Hardness 60±5 HRB
Mass= 0.227 Kg
Fix Plate For AE090-NEMA 42

	AL6061		PF130002	Front Plates
No	Material	Qty	Part No	Part Name

APEX DYNAMICS, INC.

Rev No	Revision Content	Revisier	Approver	Date

Dwg Name	FP-W107-D55.58	Page	1 / 1
Dwg No	PF130002	Size	A4
Appover		Scale	3:5
Checker		Date	21-Oct-05
Designer	Jacky Hsueh	Drawer	Jacky Hsueh