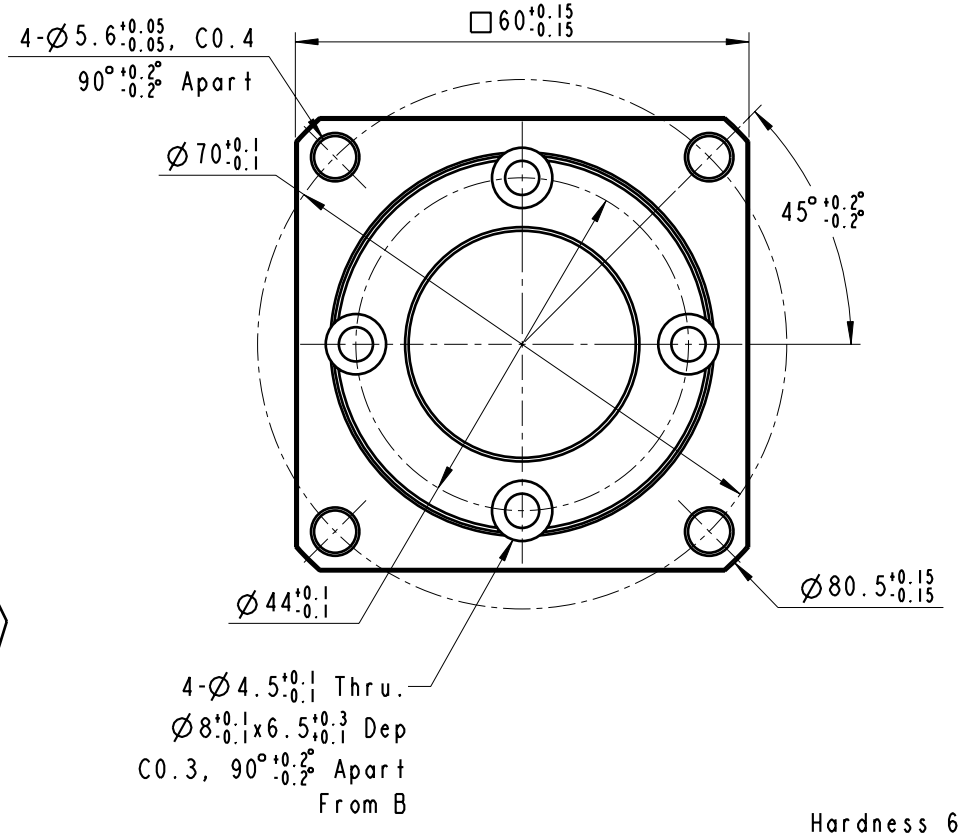

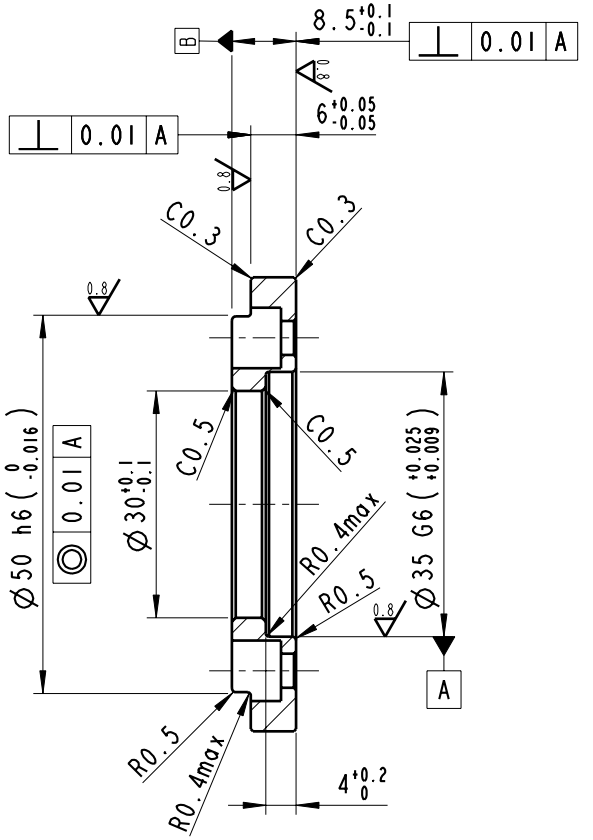

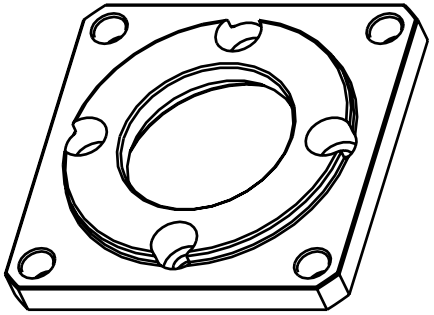

SCALE 4:5

Hardness 60±5 HRB
Mass= 0.047 Kg
Fix Plate For AE050-PX60

No	Material	Qty	Part No	Part Name
	AL6061		PF110003	Front Plates

Dwg Name	FP-W60-D50	Page	1 / 1
Dwg No	PF110003	Size	A4
Appover		Scale	1:1
Checker		Date	30-Nov-05
Designer	Jacky Hsueh	Drawer	Jacky Hsueh

APEX DYNAMICS, INC.

APEX DYNAMICS, INC.

Rev No	Revision Content	Revisier	Approver	Date